YILMAZ REDÜKTÖR ISO 9001

OPERATING INSTRUCTIONS

V Series

Hoist Drum Drive Units

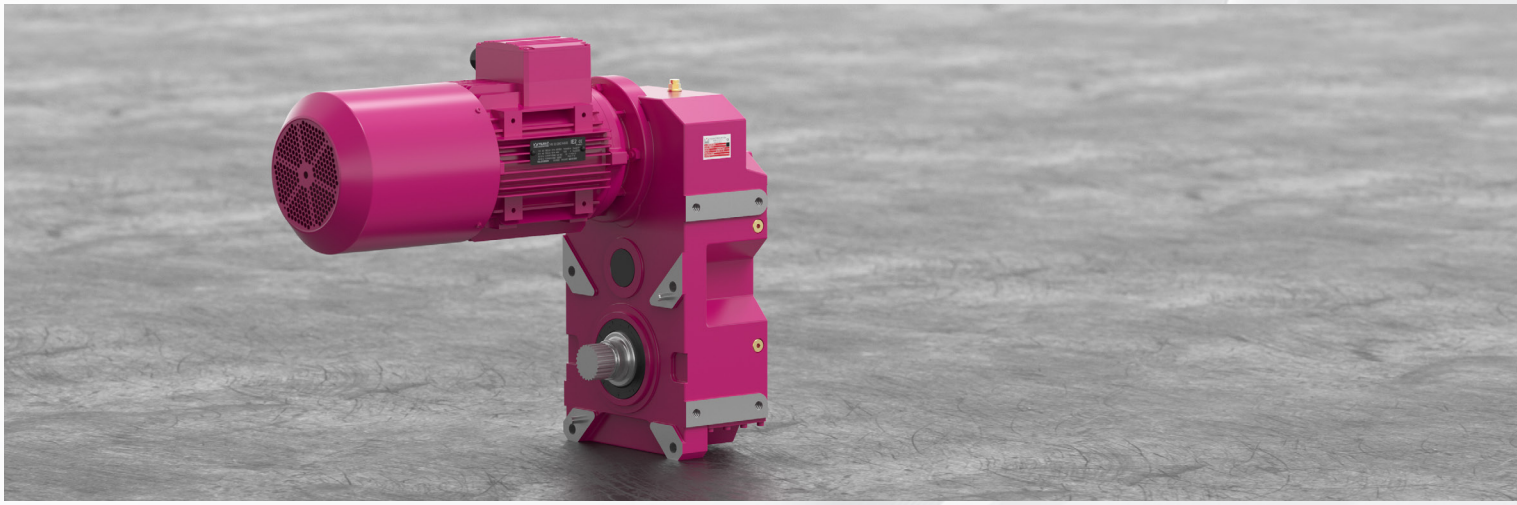

YILMAZ REDÜKTÖR

OIVCE0300-1222

Contents

Contents. **02**

1 - How to Use This Manual **04**
2 - Unit Designation **05**

2.1- Detailed Unit Designation **05**
2.2- Nameplate, Unit Designation **06**

3.Standard Type Gearbox Part List **07**

3.1- V... Types **07**

4- Safety **08**

4.1- Intended Use **08**
4.2- Improper Use **08**
4.3- Safety Instructions **09**
4.3.1- General Safety Instructions **09**
4.3.1.1- Working on the Gear Unit **09**
4.3.1.2- Operation **09**
4.3.1.3- Maintenance **09**
4.3.1.4- Lubricant **09**
4.3.1.5- Ambient Conditions **09**
4.4- Tightening Torques **10**
4.5- Case of Fire **10**
4.5.1- Suitable Extinguishing Agents **10**
4.5.2- Unsuitable Extinguishing Agents **10**

5 - Things to Check **11**

5.1- Transportation **11**
5.2- Storage **12**

6- Installing the Gear Unit. **12**

6.1- Before You Start **12**
6.2- Checking splined shaft dimensions **12**
6.3- Checking drum connection flange dimensions **14**
6.4- Checking ambient temperature **15**
6.5- Checking voltage supply **15**
6.6- Checking mounting position **18**
6.7- How to use breather plug **18**
6.8- Checking oil level **18**
6.9- Checking shaft ends and mounting faces **18**
6.10- Covering abrasive ambient **19**
6.11- Checking accessibility to filling, breather and drain plugs **19**

Contents

7- Mechanical Installation **19**

7.1- Installing output shaft elements **20**
7.2- Correct position of output shaft elements **20**
7.3- Coupling connection **21**

8- Maintenance & Inspection **22**

9- Lubrication **23**

9.1- Oil Types **23**
9.2- Changing the Oil **24**
9.3- Oil quantities (lt) and plugs **25**
9.4- Mounting Positions **26**

10- Troubleshooting Guide **27**

11- Disposal **30**

11.1- Disposal of oil **30**
11.2- Disposal of sealing **30**
11.3- Disposal of metal parts **30**

12- Appendix **31**

12.1- Warranty conditions **32**
12.2- Warranty paper **33**
12.3- Service points **34**

1- How To Use This Manual

Take attention to the following safety and warning signs for proper understanding and quick reference.

Electric Hazard; Can cause severe or fatal injuries.

Mechanical Hazard; Can cause severe or fatal injuries.

Likely to be Hazardous; Can cause minor injuries

Damage Risk; Can damage the drive or environment

Important Information

EC Machinery Directive:
Within terms of the EC machinery directive 2006/42/EC the gear reducer is not considered an autonomous machine, but as a component to install in machines. Operation is prohibited within the area of validity of the EC directive, until it has been determined that the machine, in which this product is installed, corresponds to the regulations within this directive.

The machine manufacturer or user is responsible for taking the necessary precautions on the machine or at the place where the gearbox will be used, in order to prevent injury and life-threatening risks by taking into account the shaft, gear failures etc. that may occur in the gearboxes.

The operating instructions contain important information to ensure;
- Trouble-free operation
- Fulfilment of any rights to claim under guarantee

The operating instruction must be kept close to the gearbox and must be available in case it is needed.

This operating instruction is written for V Series gear units and is applicable only for V Series. If any different type of gearbox is used please ask YILMAZ REDUKTOR for the operating instructions of that type.

This instruction can be used only for standard type geared units of YILMAZ REDUKTOR. For special application and modified gear units ask YILMAZ REDUKTOR for validity.

This manual does not cover 94/9/EC compatible gearboxes. For 94/9/EC contact YILMAZ REDUKTOR.

2- Unit Designation
2.1- Detailed Unit Designation

V R 5 7 3 . 1K - 132S / 4 - L10

Brake

L-230V **With Fan**
P-24V **With Fan**
S-230 V **Without Fan**
Z-24 V **Without Fan**

00- 5 Nm	**10-** 100 Nm
01- 10 Nm	**20-** 200 Nm
02- 25 Nm	**30-** 300 Nm
04- 40 Nm	**40-** 400 Nm
05- 50 Nm	**50-** 500 Nm

Number of Poles

Motor Size

132S / 4

- **Pole Number**
- **Frame Length**
- **Motor Size**

Output Shaft with Spline (DIN5480)
1K Standard
1L Optional
1M Optional (Only for VR673)

Stage

3 Stages

Revision Number

Housing Size
2...8

Input Type
R : **With Motor**

Gearbox Type
V Serie

2.2- Nameplate, unit designation

A sample name plate for V Series.

YILMAZ REDÜKTÖR
www.yr.com.tr
MADE IN TURKEY

Type: VR473.1K-112M/4-L05			
Serial N.: 100348988		M. Pos.: M5	
Power: 4	kW	Ratio: 61.85	
Oil: Min. VG 320	5 lt.	Speed: 23	rpm.
Drum Dia.: 200	mm	Falls: 4/1	
Class.: 5 ton - M5(2m) / ISO4301(FEM1.001/III)			
Lift. Sp.: 3.6	m/min.	Brake: 50	Nm.

Explanations:
Type : Unit designation
Serial N : Serial number of the gearbox
M. Pos. : Mounting Position
Power : Motor Power
Ratio : Ratio of the gearbox
Oil : Type and quantity of the oil in the gearbox
Speed : Output speed of the gearbox
Drum Dia. : Diameter of the crane's drum
Falls : It is the ratio between the lifting speed and the tangential velocity of the rope at the point where it is wrapping to drum
Class : Class of the crane
Lift. Sp. : Crane's lifting speed
Brake : Brake torque

3. Standard Type Gearbox Parts List
3.1- V... Types

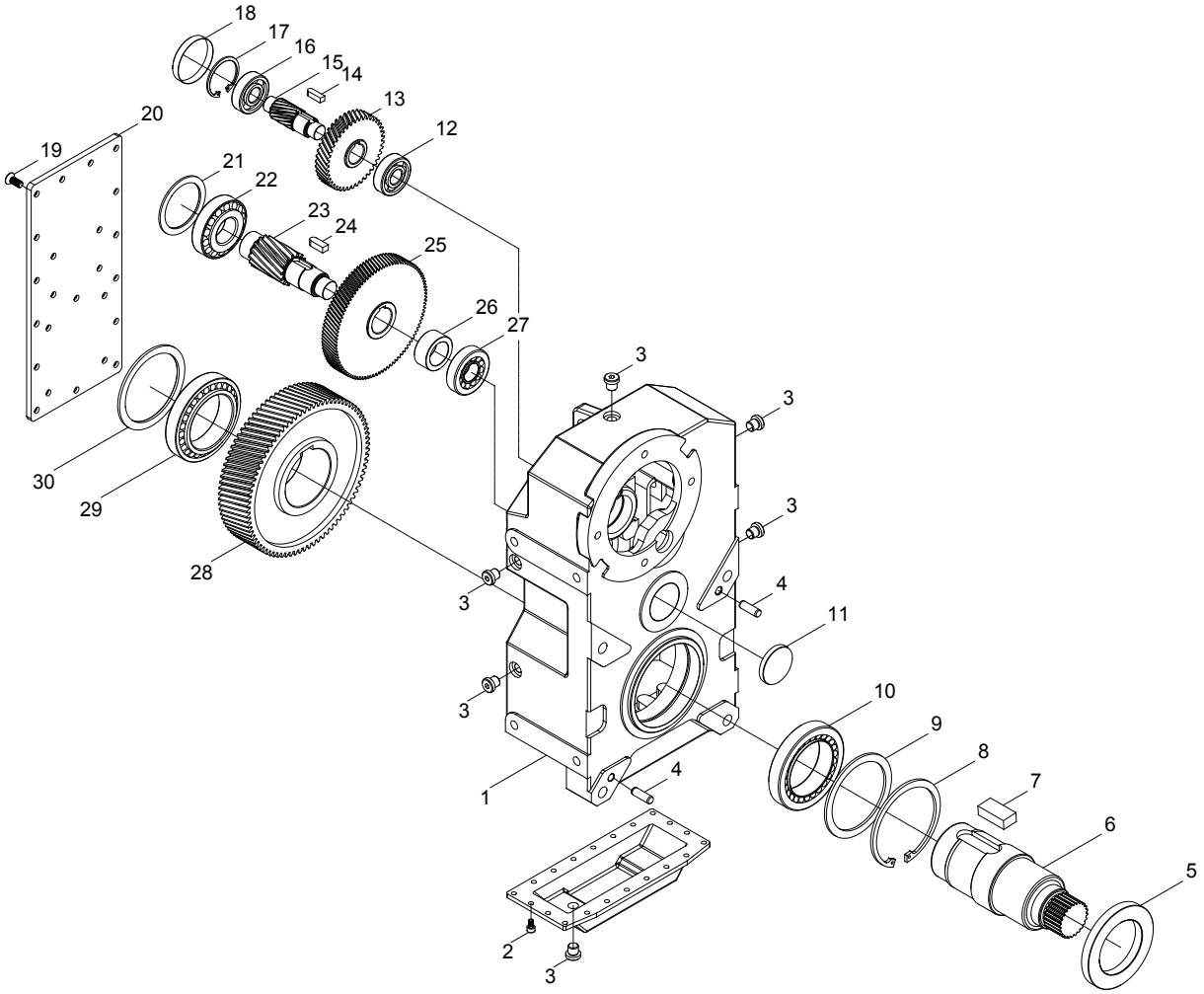

Standard V... type basic parts diagram. Parts may differ for special applications.

Standard Parts List

1- Housing	10- Bearing	19- Bolt	28- Gear
2- Bolt	11- Cover	20- Side Cover	29- Bearing
3- Plug	12- Bearing	21- Spacer	30- Spacer
4- Screw Bolt	13- Gear	22- Bearing	
5- Seal	14- Key	23- Shaft Gear	
6- Output Shaft	15- Shaft Gear	24- Key	
7- Key	16- Bearing	25- Gear	
8- Washer	17- Washer	26- Tube	
9- Spacer	18- Tube	27- Bearing	

4- Safety

4.1- Intended Use

The gear reducer is designed for use in industrial machines. Please refer to our catalogue or our web page for the maximum permitted torques and speeds. The most important maximum permitted values are indicated on the nameplate of the product. But the all data can be found on our product catalogues. Using the product out of the product catalogue/ nameplate's permitted ranges will cancel the warranty/manufacturer declaration and YILMAZ will not take any responsibility.

The gear units are intended for industrial machines and may only be used in accordance with the information provided in this manual the product catalogue and the nameplate of the gearbox. They comply with the applicable standards and regulations and meet the requirements of the directive 2006/42/EC. The gearbox must be started up, maintained and operated according this manual. The gearbox most be incorporated with 2006/42/EC confirming parts/machines.

A motor connected to the gear unit is only allowed to be operated in the frequency entries so that the data provided on nameplate/catalogue of the gear unit is not exceeded and is accordance with the nameplate/catalogue. The speed range will be provided on the name plate if YILMAZ REDUKTOR is informed that the gear unit will be used with frequency inverter. If not informed the nameplate will have a single fixed speed and only this speed is allowed. The electric motor and frequency inverter must be in accordance with 2006/42/EC

If the gear units input is used with variable speed gear unit, this must be informed to YILMAZ REDUKTOR before ordering and on the nameplate the allowed maximum and minimum speeds (speed range) will be provided. If not mentioned by ordering the gear units speed will be a fixed single input speed and only this speed is allowed.

If the gear unit will be driven by belt / coupling / chain drive etc. the gear unit is only allowed to be used according the nameplate/catalogue entries. Different speed, higher motor power, higher radial/axial loads etc. than nameplate/catalogue is not allowed.

The ambient temperature must be between +5 , +40 celsius and no abrasive media must attack the paint and seals. If different working conditions this must be informed to YILMAZ REDUKTOR before ordering.

The gearbox maintenance (oil change / check) must be done according this manual

4.2- Improper Use

Every usage which exceeds the limits stated above, the nameplate and catalogue of the product (especially higher torques and speeds) is not compliant with the regulations, and thus prohibited.
The operation of the gear reducer is prohibited if;

- -It was not mounted/installed according to regulations and this manual
- -The gear reducer is very soiled
- -It is operated without lubricant
- -It is operated out of the permitted values provided on catalogues and/or nameplate.

4.3- Safety Instructions

4.3.1- General Safety Instructions

4.3.1.1- Working on the gear reducer

- Inappropriately executed work can lead to injury or damage.
Make sure that the gear reducer is only installed, maintained and dismantled by trained technician.

- Foreign bodies spinning through the air can cause grave injury.
Before putting the gear reducer into operation, check that there are no foreign bodies or tools near the gear reducer

4.3.1.2- Operation

- Touching hot surfaces can lead to burns.
Do not touch the gear reducer if their operation temperatures are too high, or use suitable safety equipment like gloves.

-Rotating machinery can lead to injuries. There is danger of being trapped or pulled in!
Keep a sufficient distance and make safeguarding to rotating machinery. See relevant norms EN349+A1, EN13857.

4.3.1.3- Maintenance

-An unintentional start of the machine during maintenance work can lead to serious accidents.
Make sure no one can start the machine while you are working on it.

- Even a brief running of the machine during maintenance work can lead to accidents if the safety devices are not operating.
Make sure that all safety devices are mounted and active.

4.3.1.4- Lubricant

- Extended, intensive contact with oils can lead to skin irritations.
Avoid extended contact with oil, and clean oil off skin thoroughly.

- Hot oil can cause scalding.
When changing oil, protect yourself against contacting hot oil.

4.3.1.5- Ambient Conditions

- Standard gearboxes are allowed to work in ambient temperatures between +5 to +40 celsius unless differently specified on the nameplate. *Using the gear unit out of this range can cause damage to the gear unit or environment. Over +40 celsius ambient conditions the gear unit surface temp could be so high causing burns when touched.*

-If the gear unit will be used in outdoor applications the gear unit must be prevented from rain snow and dust. Entering substances inside the gear unit from seals can damage the gear unit. Observe the safety instructions for outdoor use EN12100:2010.

4.4- Tightening Torques

All screwed connections for which a tightening torque is specified, must on principle be tightened with a calibrated torque wrench and checked. Use the following torques for the threaded bores over the gear unit housing. For connecting elements refer to the mechanical installation part.

Bolt	Class	Tightening Torque [Nm]
M8	8.8	23
M10	8.8	43
M12	8.8	77
M16	8.8	190
M20	8.8	370
M24	8.8	640

4.5- Case of Fire

The gear reducer itself is not combustible. However, it usually contains a synthetic or mineral gear oil.
Please observe the following if the gear reducer is situated in a burning environment

4.5.1- Suitable extinguishing agents, Protective equipment

Always keep suitable extinguishing, protective equipment like carbon dioxide, powder, foam, fog easy accessible around the gear unit.

-High temperatures produce irritating steam.
Use a protective breathing appreciates.

4.5.2- Unsuitable extinguishing agents

Do not spray with water!

5 -Things to Check Before the Gear Unit or Geared Motor is Installed

If gear motors are used, please also refer to the manual of the motor manufacturer.

Before you install the gearbox you have to be sure that the gearbox is arrived with the all necessary equipment and without damage. Thinks to take into consideration before you start to install the unit;
- You have received the correct operation manual of the your product.
- The gearbox and all its parts are transported without damage.
- The gearbox is stored correctly according the instructions in this manual
- You have the latest product catalogue or you have access to our web page

5.1- Transportation

When the goods arrive, first check for any damage. If some damage observed, immediately contact the transport company and inform about the damage. Contact YILMAZ for the damage and do not start to install the unit until it is agreed that the damage has no affect of operation.

Use the upper foot connection holes for lifting up the gear unit by using eyebolts. The eyebolts should be capable to carry the weight of gearboxes. Do not hang additional loads on the gear box by lifting. Use suitable hoisting equipment which is capable to hold the gear units weight. Refer to the catalogue for various types weights. If the gearbox is delivered with steel carrying construction use the construction holes for lifting the gear unit. See drawing bellow for hoisting point.

Do not stay beneath / under the lifting/hoisting equipment which may cause serious injuries by falling down objects, accidental movements, unexpected accidents.

STOP

Falling or hard placement can damage the gear unit.
Only use hoisting and securing equipment which is permitted for the size / weigh of your gear unit. Ensure that the load is slowly and carefully handled and placed.

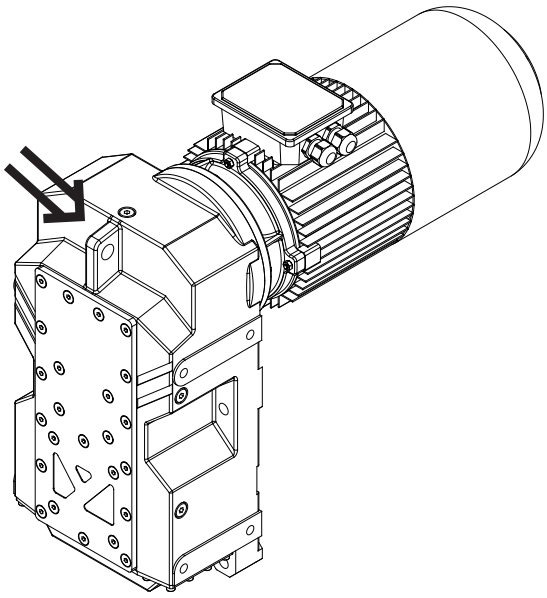

5.2- Storage

If the geared unit or geared motor will be stored up to 3 years refer to the following instructions;

With Packing;

-Use corrosion protection oil for the output shaft and connection surfaces like flange surface or foot assembling surface. Seal the unit in a plastic wrap and pack it in container. A moisture indicator should be placed around the container to observe the moisture. Relative atmospheric humidity should not exceed 50%. The container should be kept under roof which protects from snow and rain. Under this condition the gear unit can be stored up to 3 year with regular check. The ambient temperature should be between -5 to 60 Celsius degrees

Without Packing;

-Use protection oil for the output shaft and connection surfaces like flange surface or foot assembling surface. If no packing is used and the gearbox is stored without packing, the ambient temperature should be between 5 to 60 Celsius degrees. The gearbox must be kept under enclosed roof with constant temperature and constant humidity not exceeding 50%. The storage should be free of dust and dirt and ventilated with filter. If the gearbox is stored without packing it is recommended not to store more than 2 years and regular check during this time is recommended.

If stored in open areas protect against insect damage.

6- Installing The Gear Unit

6.1- Before you start;

- Observe the gear unit for damages of storage or transportation. If any damage please contact YILMAZ REDUKTOR.

- Be sure that you have all the equipment necessary for installing like; Spanners, torque wrench, shims and distance rings, fixing devices for input and output elements, lubricant, bolt adhesive etc.

- This manual is not for 94/9/EC (ATEX) conforming gear units. For 94/9/EC conforming gear units refer to the ATEX range manual. ATEX conforming gear units have name plates indicating the zone and the temperature class and are different from standard type geared units. Therefore Standard units can not be installed on Potentially explosive atmospheres.

6.2- Check Splined Shaft Dimensions and Tolerances

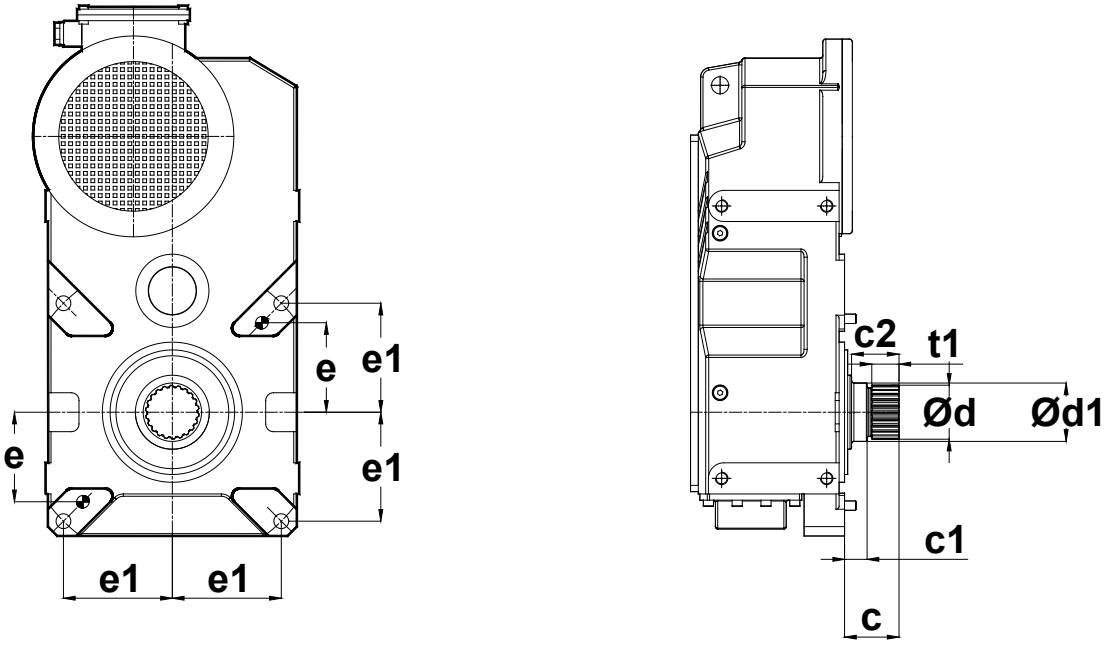

Type	Splined Shaft Dimensions						
	e	e1	c	c1 c2	d	d1	t1
V273.1K	60	75	50	17.5 44.5	**W35x2x30x16x8f DIN5480**	ø40 (h6)	28
V373.1K	75	90	55	22 48	**W45x2x30x21x8f DIN5480**	ø50 (h6)	28
V373.1L			50	22 43	**W40x2x30x18x8f DIN5480**	ø43 (h6)	23
V473.1K	95	110	60.5	27 51,5	**W50x2x30x24x8f DIN5480**	ø55 (h6)	28
V473.1L			48	16 42	**W45x2x30x21x8f DIN5480**	ø48 (h6)	27
V573.1K	115	140	69	28 61	**W70x3x30x22x8f DIN5480**	ø75 (h6)	35
V573.1L			56	16 51	**W65x2x30x31x8f DIN5480**	ø68 (h6)	35
V673.1K	132.5	157.5	84	32 74	**W95x3x30x30x8f DIN5480**	ø100 (h6)	45
V673.1L			67	17 60	**W75x2x30x36x8f DIN5480**	ø78 (h6)	44
V673.1M			75	21 68	**W90x2x30x44x8f DIN5480**	ø92 (h6)	45
V773.1K	160	187.5	110	35 97	**W110x4x30x26x8f DIN5480**	ø115 (h6)	67
V773.1L			97	21 89	**W110x2x30x54x8f DIN5480**	ø113 (h6)	67
V873.1K	185	235	124	41 107	**W120x4x30x28x8f DIN5480**	ø130 (h6)	83

6.3- Check Drum Connection Flange (Optional) Dimensions and Tolerances

Type	Drum Connection Flange Dimensions
V273 GN25.V27.FK	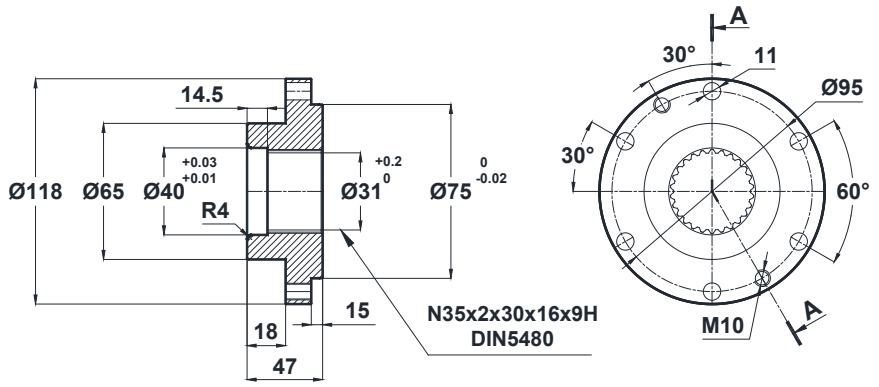
V373 GN25.V37.FK	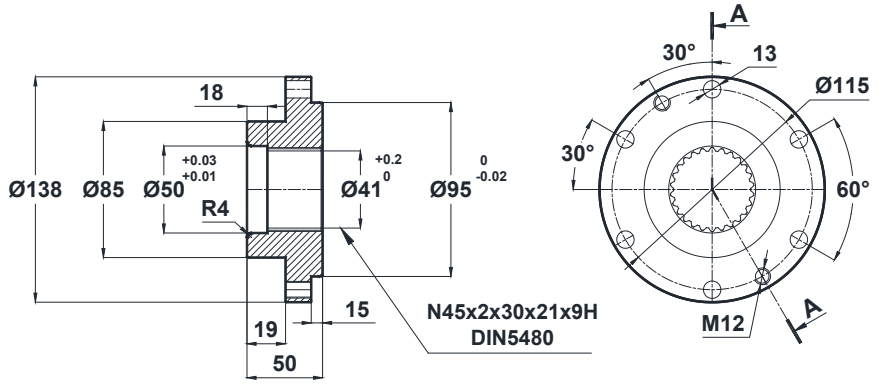
V473 GN25.V47.FK	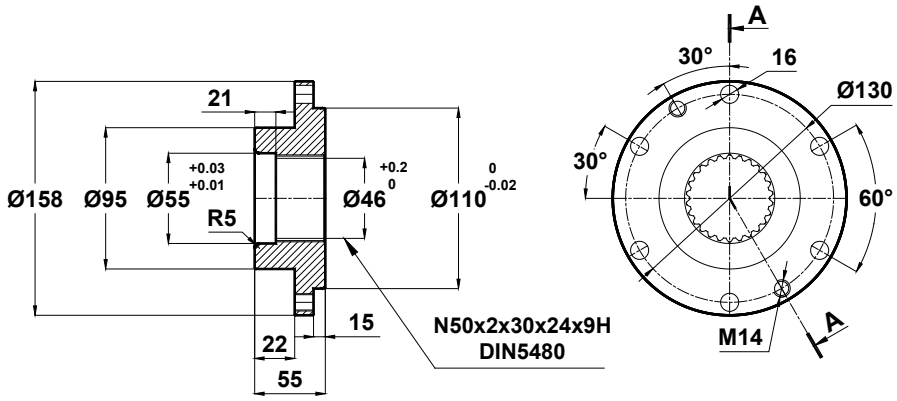
V573 GN25.V57.FK	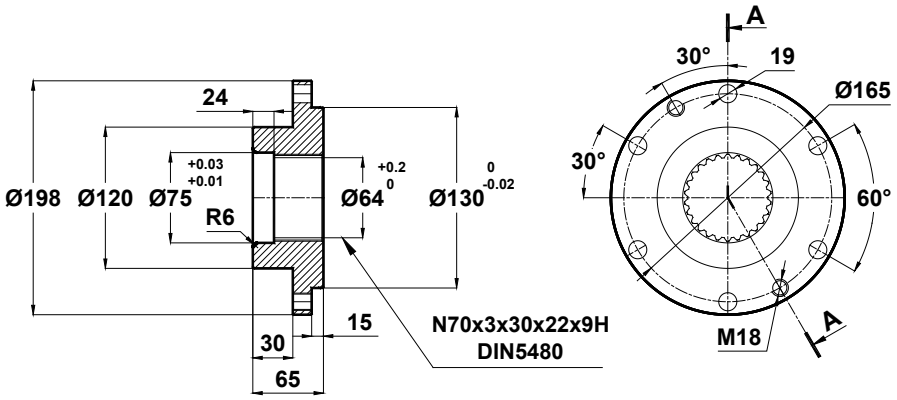

Type	Drum Connection Flange Dimensions
V673 GN25.V67.FK	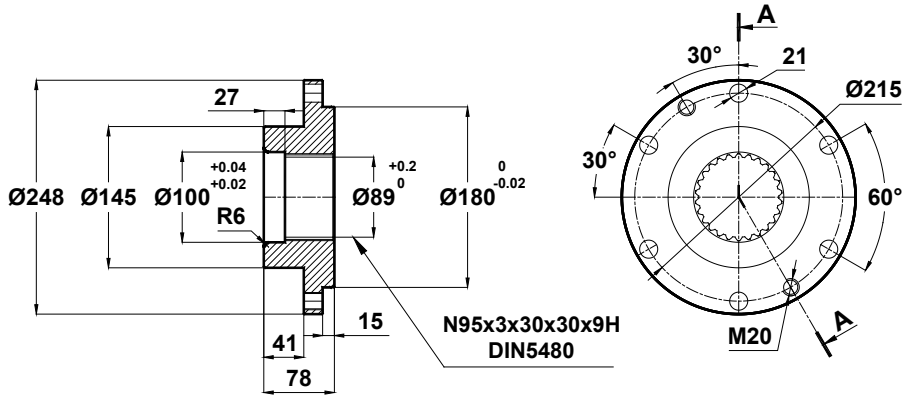
V773 GN25.V77.FK	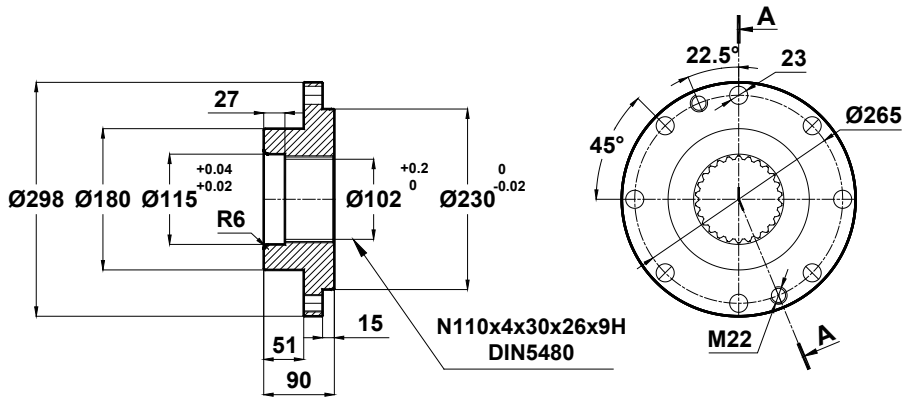
V873 GN25.V87.FK	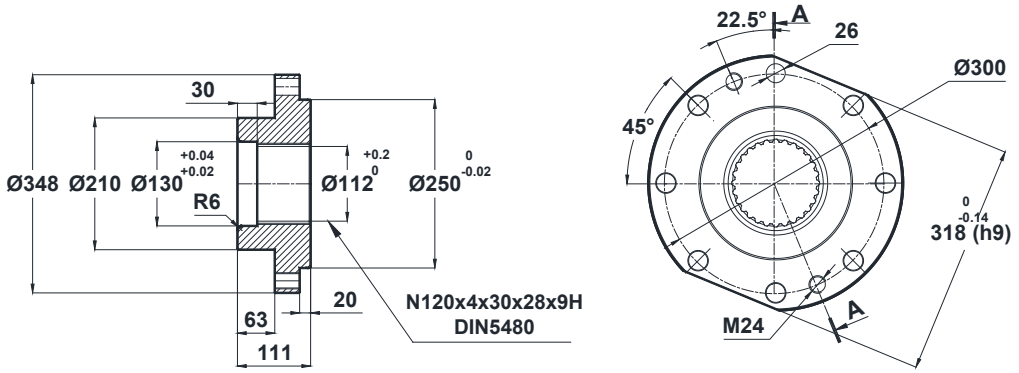

6.4- Check the ambient temperature;

The ambient temperature must be between +5 celsius to +40 celsius for standard type gear units. If different contact YILMAZ REDUKTOR for special solutions.

6.5- Check the voltage supply;

The standard geared motors are supplied with 230/400 V 50/60Hz. up to 3kW including 3kW and 400/690 V 50/60 Hz. over 3kW and is indicated on the motors name plate unless it is differently ordered. In case of only gear unit is supplied from YILMAZ please observe the name plate of the electric motor and the instructions of the supplier. Check the basic electric connection diagrams below. Use experienced electric technician.

STOP *Using wrong connection or voltage can damage the electric motor or environment.*

The following wiring diagram is for standard 230/400 V 50Hz AC electric motors. For different voltages please contact YILMAZ REDUKTOR. For gear units supplied without motor, refer to the motor manufacturers user manuel.

The electric connection must be done by experienced electric technician.
The gearbox, the motor and the brake must be grounded to prevent potential differences of earth and gearbox/motor.

Pole Number	Nominal Power at 400V, 50Hz	
	230V (Δ) / 400 V (Y)	400V (Δ)
2 or 4	≦ 3 kW	⩾ 4 kW
6	≦ 2,2 kW	⩾ 3 kW
8	≦ 1,5 kW	⩾ 2,2 kW
Starting Principle	Direct	Direct or Y/Δ

Basic motor connection wiring diagram

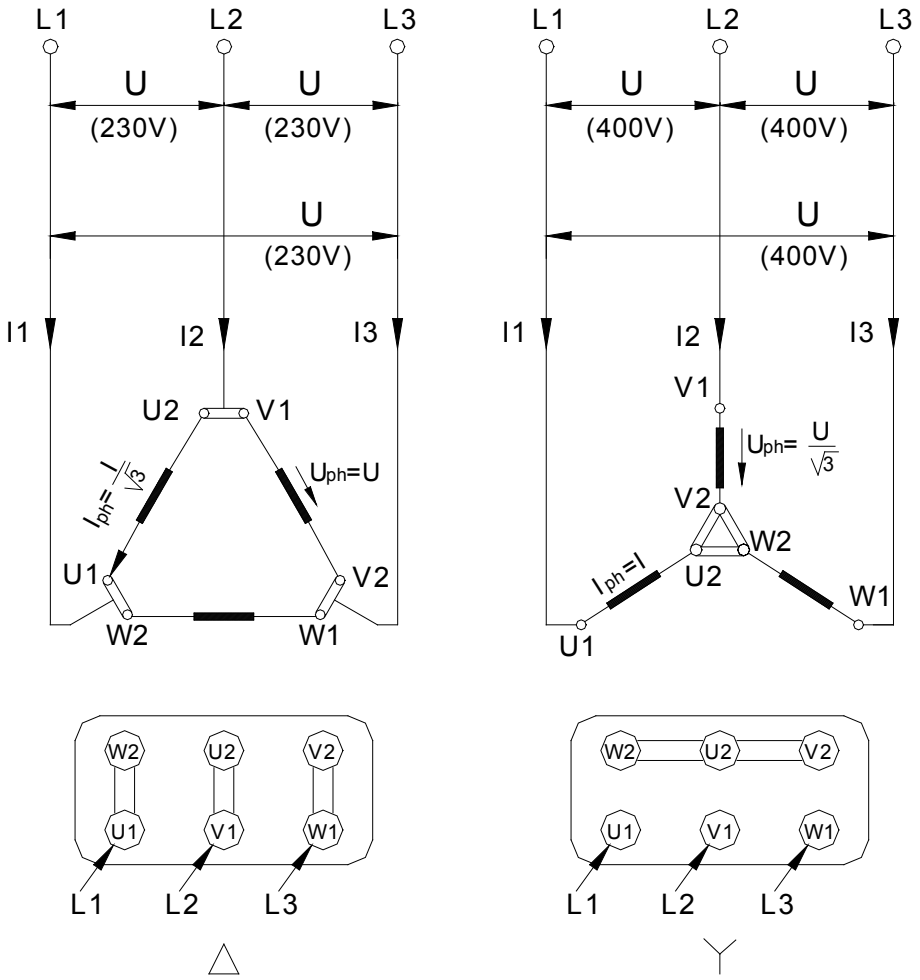

Standard type brakes basic wiring diagram

The electric connection must be done by experienced electric technician.
The gearbox and the motor must be grounded to prevent potential differences of earth and gearbox/motor.

Delayed Running Brake(380 V)

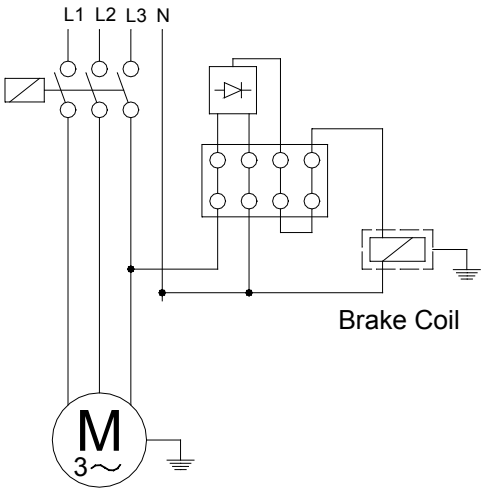

Sudden Brake (380 V)

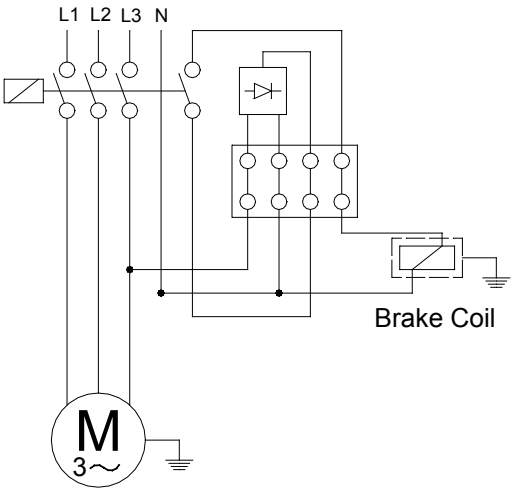

Delayed Running Brake (24 V)

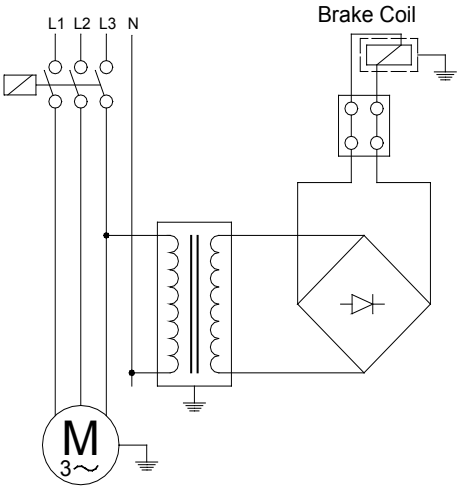

Sudden Brake(24 V)

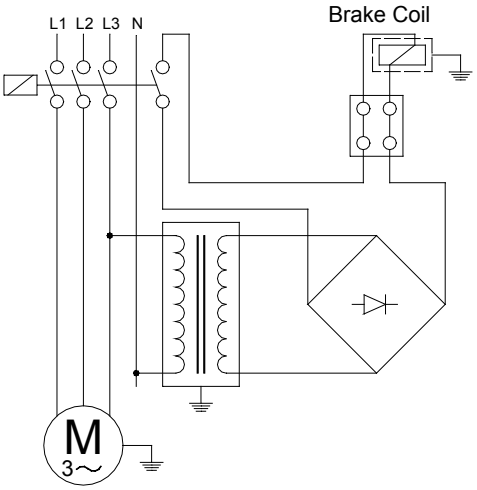

6.6- Check the mounting position;

The mounting position must be in accordance with the mounting position mentioned on the name plate. If different please contact YILMAZ REDUKTOR for possibilities of using in a different mounting position. Refer to the mounting positions and oil quantities on this manual and adjust the oil level accordingly with the recommended oil types given on this manual.

STOP

Do not mix synthetic oils with mineral oils which can cause serious damage on the gear unit.

6.7- Use of breather plug;

Breather plug is delivered with the gearbox together by YILMAZ REDUKTOR. Breather plug must be on the top of the gearbox according to mounting position.

As shown in the label below, the transport protection rubber must be removed before operating the gear unit.

Some plug positions are not machined according mounting position. If no mounting position is mentioned by ordering the standard M5 position plugs are machined.

6.8- Check the oil level;

On the mounting position tables the oil level plug is shown. Please refer to those tables and be sure that the oil level is correct according the mounting position by screwing half way out the level plug and see if oil comes out from that plug. If oil comes out tighten the plug again. If no oil comes out take out the filling plug and add oil until oil comes out from the level plug and tighten both plugs after finish. Be sure you are using the correct oil mentioned on the oil tables on this manual.

STOP

Do not mix synthetic oils with mineral which can cause serious damage on the gear unit.

6.9- Check shaft ends and mounting faces;

Before you start to installing be sure that all the connection elements are free of oil and dust. The output shaft may be protected by anti-corrosion oil. Please remove this using available solvents on your market. By using this do not touch sealing lips or painting of the housing.

6.10- Cover abrasive ambient;

If the gear unit will be placed on a abrasive ambient be sure that the output seals are covered so that no abrasive material, chemicals or water touches the seals. Any pressure coming from outside over the seals can cause that the out staying substances to enter the gearbox and cause serious damage to the gear unit. If pressure or abrasive material can not be prevented from coming over the sealing, contact YILMAZ REDUKTOR for solutions.

STOP

Abrasive material, chemicals, water, positive or negative pressure exceeding 0,2 bar can affect or damage the sealing lip or output shaft. Inside entering substances from the seals can cause serious damage to the gear unit.

6.11- Check accessibility to filling, breather and drain plugs;

The filling, breather and drain plugs must be freely accessible for further checking and service.

7- Mechanical Installation

The gear unit can only be installed using the supplied connection points like foot and flange assembling points.

To install the gear unit without the supplied connection points can cause serious injuries by loosening or braking the gear unit. Even the gear unit is installed totally correctly according this Manuel, be sure that no one will be harmed by accidentally brake downs or loosening.

The mounting plate must be rigid enough not allowing torsions, flat enough to prevent strains by tightening the bolts and stable enough not allowing vibrations. By using chain drives this becomes much more important because of the polygon effect on chain drives. According to your connection elements the maximal permitted radial and axial load of the gear unit must be in accordance with your application. Check the product catalogue for permitted radial loads and calculation.

If the output or input shaft is overloaded by radial or axial loads it can cause serious damage to the gear unit.

Secure the gear unit using 8.8 or higher quality bolts.

Cover all the turning parts from human entering or touching. Turning parts can cause severe or fatal injuries.

For different kind of basic installations refer to the following illustrations.

7.1- Fitting output shaft elements

Use the following illustration to assemble output shaft units

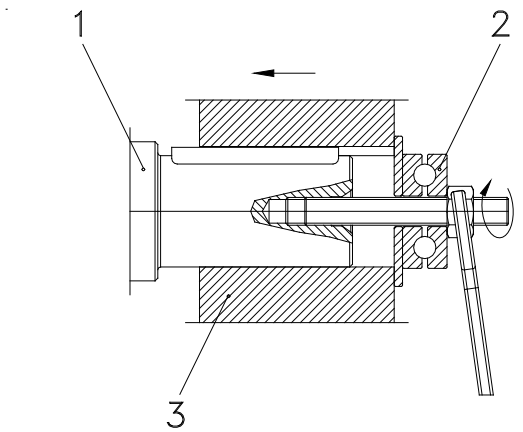

1) Shaft
2) Bearing
3) Coupling Hub

7.2- Correct position of output shaft elements

The Output Shaft unit (transmission elements) must placed as close as possible to the gear unit so that the radial load is as closest as possible to the gear unit.

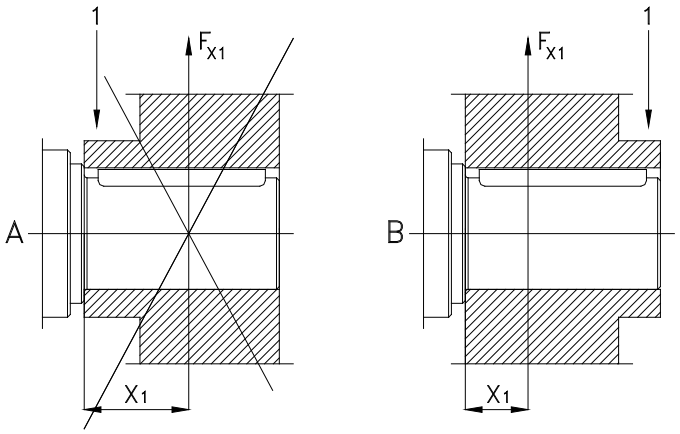

1) Hub

7.3- Fitting Couplings

7.3.1- By fitting couplings be sure that there is some clearance between the two elements

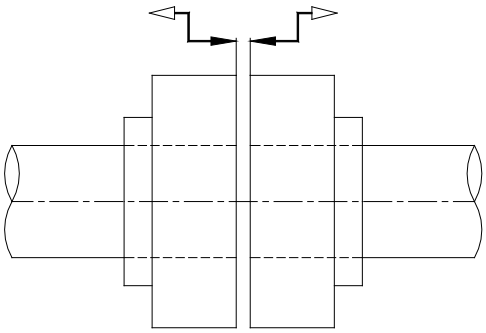

7.3.2- By fitting couplings be sure that there is no eccentricity between the two shafts.

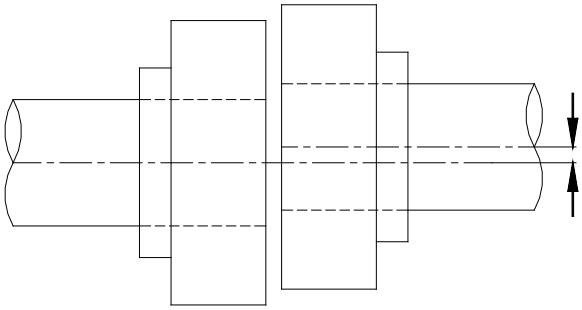

7.3.3- By fitting couplings be sure that the two shafts are not angular miss-aligned

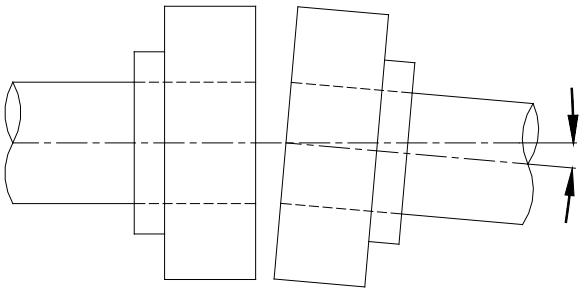

8- Maintenance and Inspections

Under normal ambient and working conditions the gear unit should be checked according the following intervals. (For definition of normal working conditions refer to the product catalogue: “Selecting Gearbox” section);

Item to check / replace	Every 3.000 working hours or every 6 months	Every 4.000 working hours	Every 10.000 working hours or every 3 years	Every 25.000 working hours
Check for oil leakage	x			
Check for oil level	x			
Check oil leakage from seal	x			
Check Rubber buffer	x (Change if necessary)			
Check Bearings Noise		x (Change if necessary)		
Change Mineral Oil			x (See Below for details)	
Change Synthetic-PAO Oil				x (See Below for details)
Change Sealing				x
Change Bearing Grease				x
Change Bearings				x
Check for noise Changes				x

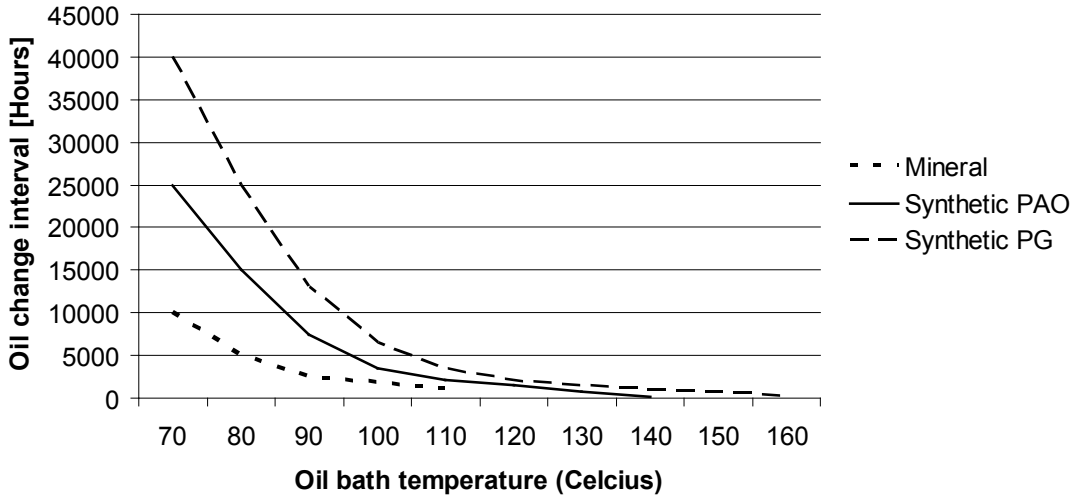

For normal ambient conditions 70 degrees Celsius oil bath temp. Should be taken as reference

* For V Series mineral oil is used unless it is differently ordered. For oil type and quantities refer to the following tables.

9- Lubrication

9.1- Oil Types

Lubricant	DIN 51517-3	Ambient Temp. [ºC] / Dip Lubrication	ISO VG	Aral	Beyond Petroleum	Castrol	Klüber Lubrication	Mobil	Shell	Total
Mineral Oil	CLP	0 ... +50	680	Degol BG 680	Energol GR-XP 680	Alpha SP 680	Klüberoil GEM 1-680 N	Mobilgear XMP 680	Omala S2 GX 680	Carter EP 680
		-5 ... +45	460	Degol BG 460	Energol GR-XP 460	Alpha SP 460	Klüberoil GEM 1-460 N	Mobilgear XMP 460	Omala S2 GX 460	Carter EP 460
		-10 ... +40	320	Degol BG 320	Energol GR-XP 320	Alpha SP 320	Klüberoil GEM 1-320 N	Mobilgear XMP 320	Omala S2 GX 320	Carter EP 320
		-15 ... +30	220	Degol BG 220	Energol GR-XP 220	Alpha SP 220	Klüberoil GEM 1-220 N	Mobilgear XMP 220	Omala S2 GX 220	Carter EP 220
		-20 ... +20	150	Degol BG 150	Energol GR-XP 150	Alpha SP 150	Klüberoil GEM 1-150 N	Mobilgear XMP 150	Omala S2 GX 150	Carter EP 150
		-25... +10	100	Degol BG 100	Energol GR-XP 100	Alpha SP 100	Klüberoil GEM 1-100 N	Mobilgear XMP 100	Omala S2 GX 100	Carter EP 100
Synthetic Oil	CLP PG	-10 ... +60	680	Degol GS 680	Energsyn SG-XP 680	–	Klübersynth GH 6 -680	Mobil Glygoyle 680	Omala S4 WE 680	Carter SY 680
		-20 ... +50	460	Degol GS 460	Energsyn SG-XP 460	Alphasyn PG 460	Klübersynth GH 6 -460	Mobil Glygoyle 460	Omala S4 WE 460	Carter SY 460
		-25 ... +40	320	Degol GS 320	Energsyn SG-XP 320	Alphasyn PG 320	Klübersynth GH 6 -320	Mobil Glygoyle 320	Omala S4 WE 320	Carter SY 320
		-30 ...+30	220	Degol GS 220	Energsyn SG-XP 220	Alphasyn PG 220	Klübersynth GH 6 -220	Mobil Glygoyle 30	Omala S4 WE 220	Carter SY 220
		-35 ... +20	150	Degol GS 150	Energsyn SG-XP 150	Alphasyn PG 150	Klübersynth GH 6 -150	Mobil Glygoyle 22	Omala S4 WE 150	Carter SY 150
		-40 ... +10	100	–	–	–	Klübersynth GH 6 -100	Mobil Glygoyle 100	–	–
	CLP HC	-10 ... +60	680	–	–	–	Klübersynth GEM 4-680 N	Mobil SHC Gear 680	Omala S4 GXV 680	Carter SH 680
		-20 ... +50	460	Degol PAS 460	Enersyn EP-XF 460	Alphasyn T 460	Klübersynth GEM 4-460 N	Mobil SHC Gear 460	Omala S4 GXV 460	Carter SH 460
		-30 ... +40	320	Degol PAS 320	Enersyn EP-XF 320	Alphasyn T 320	Klübersynth GEM 4-320 N	Mobil SHC Gear 320	Omala S4 GXV 320	Carter SH 320
		-40 ... +40	220	Degol PAS 220	Enersyn EP-XF 220	Alphasyn T 220	Klübersynth GEM 4-220 N	Mobil SHC Gear 220	Omala S4 GXV 220	Carter SH 220
		-40 ... +40	150	Degol PAS 150	Enersyn EP-XF 150	Alphasyn T 150	Klübersynth GEM 4-150 N	–	Omala S4 GXV 150	Carter SH 150
		-40 ... +40	100	–	–	–	Klübersynth GEM 4-100 N	–	–	–
Food Grade Oil	CLP NSF H1	-30 ... +25	220	–	–	Optileb GT 220	Klüberoil 4 UH1-220 N	Mobil SHC Cibus 220	–	Nevastane SL 220
Biodegradable Oil	CLP E	-25 ... +40	320	–	–	Tribol BioTop 1418-320	Klübersynth GEM 2-320	–	–	Carter Bio 320

	Product Code	Working Temp. [ºC]	NLGI Grade	Base Oil	Colour
Mineral Grease	Mobil XHP 223	-20 ... +140	NLGI 3	ISO VG220	Blue
Synthetic Grease	Mobil SHC Grease 460 WT	-30 ... +150	NLGI 1.5	ISO VG460	Red
	Mobilith SHC 100	-40 ... +150	NLGI 2	ISO VG100	
Food Grade Grease NSF H1	Mobil SHC Polyrex 222	-30 ... +170	NLGI 2	ISO VG220	White
	Castrol Optileb™ GR 823-2	-30 ... +120	NLGI 2	ISO VG192	
Liquid Grease (Mineral)	Shell Gadus S2 V 220 00	-20 ... +100	NLGI 00	ISO VG220	Brown

9.2- Changing the Oil

Refer to the nameplate to find out the correct oil type filled inside the gearbox.

- Do not mix synthetic oils with mineral oils which will cause serious damage to the gear unit. The oil change must be done by using the filling, draining and level plugs according the mounting position illustrated at oil plugs tables.

- Extended, intensive contact with oils can lead to skin irritations. Avoid extended contact with oil, and clean oil off skin immediately.

- Hot oil can cause scalding. When changing oil, protect yourself against contacting hot oil, use protective gloves.

9.3- Oil Levels,Plugs and Quantities

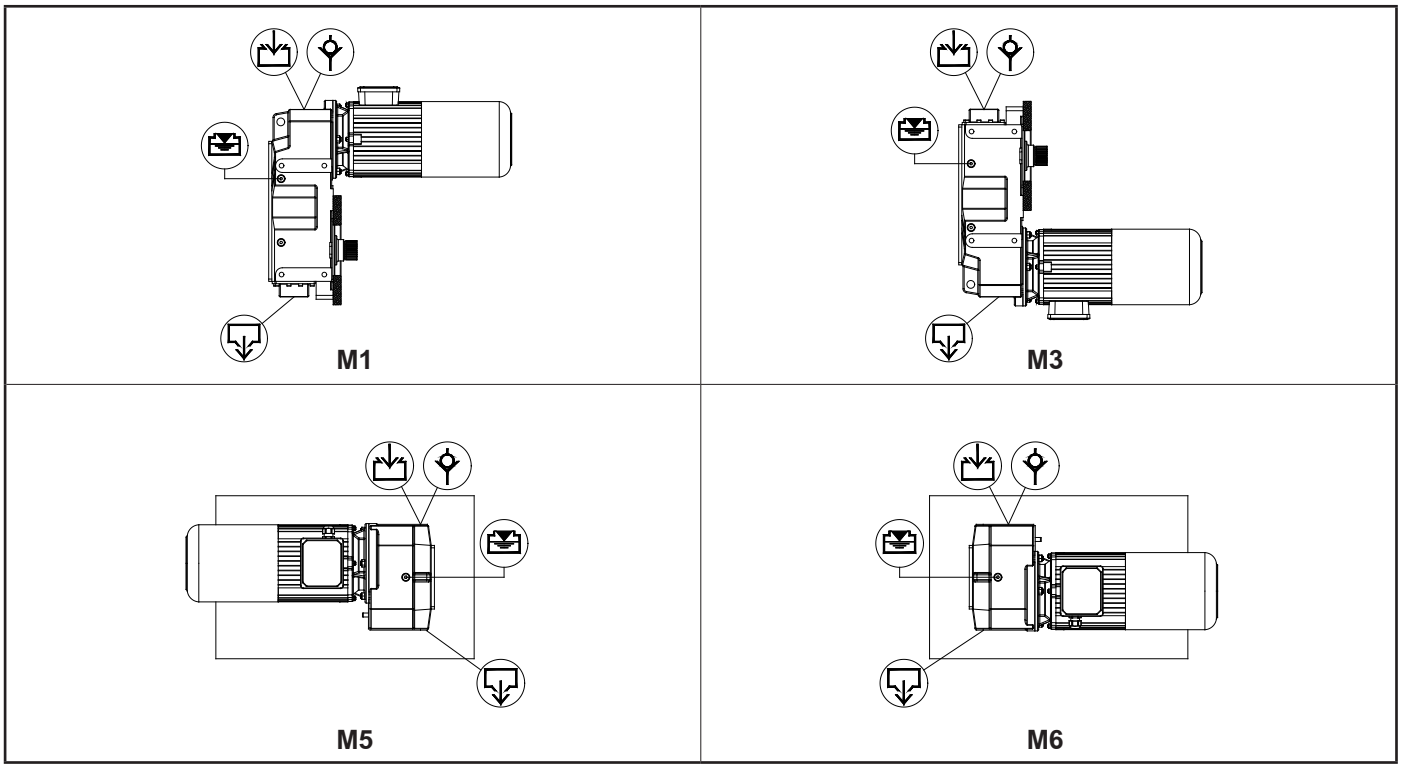

Oil Quantities (lt)

Tip	V Series Oil Quantities (lt)			
	M1	M3	M5	M6
V273	1,8	2,2	1,45	1,4
V373	3,3	4,0	2,6	2,5
V473	4,5	6,9	4,3	4,1
V573	9,7	12,5	9,2	9,0
V673	16,3	21	16	15,8
V773	30	18	21	20,5
V873	49,5	30	35	34

Symbols : *:Oil filling* *:Drain plug* *:Oil level* *:Vent Plug*

9.4- Mounting Positions

V Series

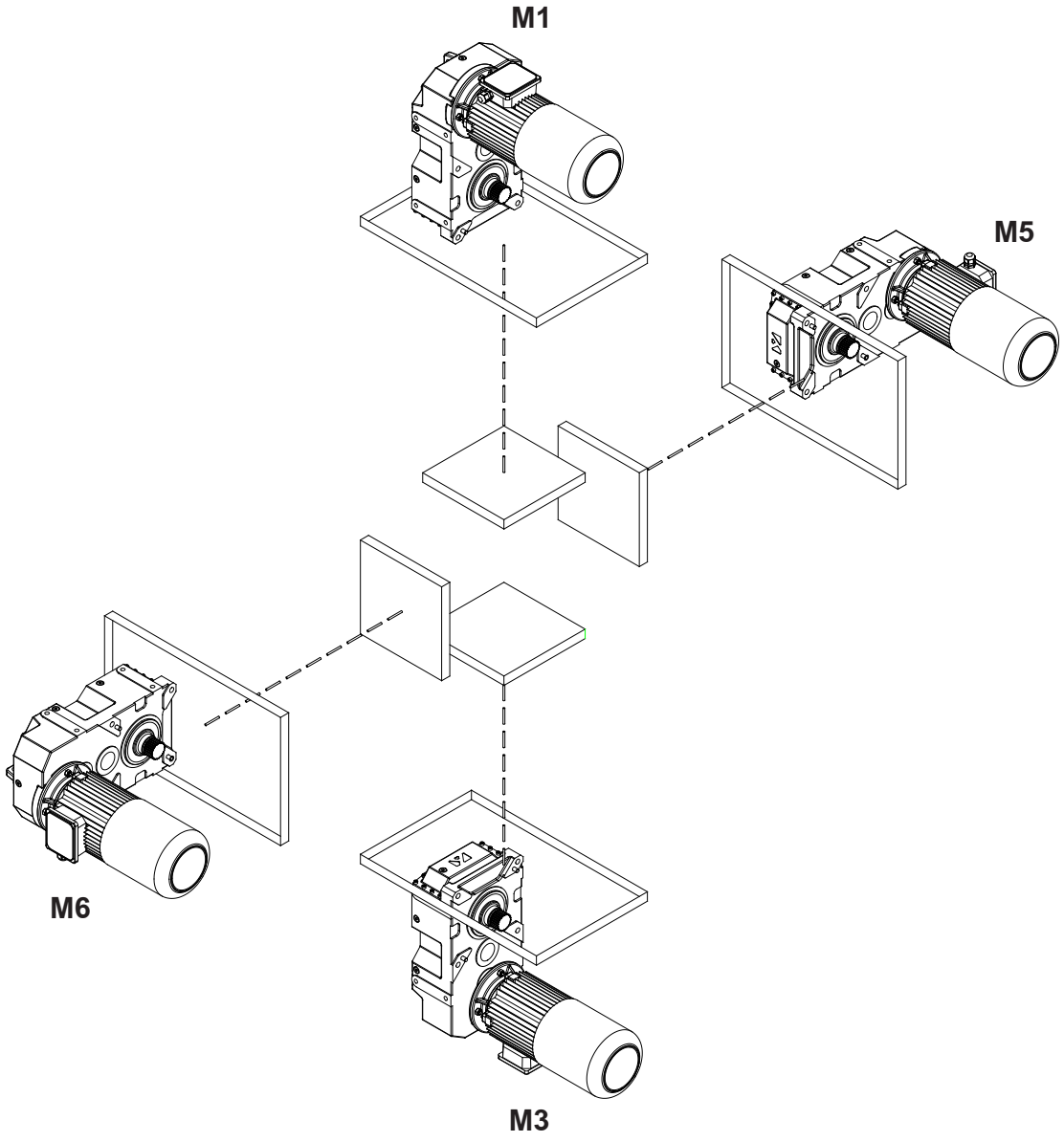

Indicated mounting positions are determined as reference directional position of the gearbox. Mounting surfaces are not binding.

10- Troubleshooting Guide

All the operations bellow must be done by authorized and skilled mechanician /electrician. Inform YILMAZ REDUKTOR before making any change to the gearbox. Only oil change is allowed to change without information. Do not make anything if you are not sure what you are doing and contact YILMAZ REDUKTOR. Any change or operation done without the information of YILMAZ REDUKTOR is in your own risk and responsibility and YILMAZ REDUKTOR does not take any responsibility.

ID	Problem	Observation	Remedy
001	Gearbox Does Not Start Up	You hear no noise and shaft is not turning. You are not using any driver or frequency inverter.	Please Check the voltage supply and frequency of your electric connection. They must be in accordance with the nameplate of the motor. Observe motor manufacturers start up manual. Still does not work go to ID 100
002	Gearbox Does Not Start Up	You hear no noise and shaft is not turning. You are using frequency inverter or driver.	Please observe the frequency inverter/driver manual. Check the motor by supplying direct voltage to see if the problem is on your driver/frequency inverter. Still does not work go to ID 001.
003	Gearbox Does Not Start Up	You hear some noise but both motor shaft and gearbox shaft is not turning. You are not using any driver /frequency inverter or braked motor.	Please Check the voltage supply and frequency of your electric connection. They must be in accordance with the nameplate of the motor. Observe motor manufacturers start up manual. Still same problem, the load may be too high for the chosen motor. Loosen the gearbox from the load/torque. If it works than the starting torque is insufficient and higher motor power is needed. For mono phase motors, check the starting up condensator and running condensator as well. If nothing helps go to ID 100
004	Gearbox Does Not Start Up	You hear some noise but both motor shaft and gearbox shaft is not turning. You are using driver or frequency inverter.	Please observe the frequency inverters or drivers manual. To see if the problem is on your driver or frequency inverter take out the driver/frequency inverter and make direct voltage supply to the motor according the motors nameplate. Still does not work go to ID 100
005	Gearbox Does Not Start Up	You hear some noise but both motor shaft and gearbox shaft is not turning. You are using braked motor	Please Check the voltage supply and frequency of your electric connection. They must be in accordance with the nameplate of the motor. Observe motor manufacturers start up manual. Be sure that the brake is working. Observe the brake manufacturers manuel. If brake is supplied from YILMAZ observe this manuel for correct brake wiring diagram. If still not work supply the brake with voltage according its nameplate directly. For example 198 V DC. You will hear a clicking noise explaining that the brake is opening. If you hear no noise the brake or rectifier is defect. If you hear the clicking noise the brake is working. You should this clicking noise by your normal electric connection as well. By supplying direct supply to the brake you hear the clicking noise and at same time you supply the motor with direct voltage according to its name plate and still same problem, the load may be too high for the chosen motor. Go to ID 003.

ID	Problem	Observation	Remedy
006	Gearbox Does Not Work in Low speeds / Frequencies.	You are using frequency inverter.	For very low speeds the frequency inverters frequency is lowering down. For very low frequencies the inverter parameter and motor parameter must be optimise. Also for low speeds the efficiency of the gearbox may vary too much. Specially for worm-gearboxes. The recommended frequency range is 20-70 Hz for worm-gearboxes and 10-70 Hz for Helical Gear Boxes. Use Higher motor power and Frequency inverter or change ratio of gearbox to work inside the recommended range.
007	Gearbox Does Not Start Mornings or After Long Time Stop.	Ambient Temperature is below +5 Celsius	The oil is not in accordance with your working conditions. Change to lower viscosity oils. Observe this manual for using the correct oil. Working in higher ambient temperatures is an other solution if possible. If still same problem you need higher motor power.
008	Gearbox is Heating Up too Much	You are using Worm Gear Box and ambient temperature is lower than +40 Celsius	Measure the surface temp. using a temperature measuring device under full load. If the temp is under +80 Celsius this will make no harm to the gearbox and is normal. All ATEX conforming gearboxes and standard worm gearboxes are designed to work under max. +120 Celsius. If higher than +120 Celsius and using ATEX conforming gear box immediately stop the system and contact YILMAZ REDUKTOR. Go to ID 100. If not ATEX confirming check the oil type and oil quantity/level according your mounting position and check the nameplate mounting position. If nameplate mounting position does not fit the actual position go to ID 100.
009	Gearbox is Heating Up too Much	You are using Helical Gear Box. Ambient temp is lower than +40 Celsius	Measure the surface temp. using a temperature measuring device under full load. If the temp is under +80 Celsius this will make no harm to the gearbox and is normal. All ATEX conforming gearboxes are designed to work under max. +120 Celsius. If higher than +120 Celsius and using ATEX conforming gear box immediately stop the system and contact YILMAZ REDUKTOR. If not ATEX gearbox the gearbox is designed to work under max. +80 Celsius. If higher than +80 Celsius check the oil type and oil quantity/level according your mounting position and check the nameplate mounting position. If nameplate mounting position does not fit the actual position go to ID 100
010	Gearbox is Heating Up too Much	Ambient Temp is over +40 Celsius	Standard Gearboxes are designed to work under +40 Celsius. ambient temperature. If ambient temp is higher than +40 Celsius special solutions/gearboxes are required. Please contact YILMAZ
011	Gearbox is noisy	Noise is regular continuous	Check Your moving parts for noise. Disassemble the gearbox and run without load. If you still hear the noise motor bearings or gearbox bearings are defect. Change bearings. Go to ID 100
012	Gearbox is noisy	Noise is random	Check Your moving parts for noise. Disassemble the gearbox and run without load. If you hear still the noise the oil may has some particles inside. Change the oil and look for small particles. If metal particles are found the gearbox may have some damage. Goto ID 100

Troubleshooting Guide

ID	Problem	Observation	Remedy
013	Gearbox is noisy	Regular knocking noise	Check Your moving parts for noise. Disassemble the gearbox and run without load. If you still hear the noise one of the gears inside is defect. Go to ID 100
014	Gearbox is noisy	Regular up and down noise	Check the output-shaft connection elements for run out. Take out the output shaft element and run without load. If you still hear the noise one of the gears has run out problem. Go to ID 100
015	Gearbox is noisy	Gearbox is with braked motor and noise is coming from the brake side randomly.	Low randomly clicking noise may come from the brake disk which is normal. If noise level is disturbing the brake may be defect or brake clearance is not adjusted. Go to ID 100
016	Gearbox is noisy	You are using frequency inverter and the noise level is changing according your speed.	The frequency inverter parameters are not optimise for the frequency range or motor you are using. Observe the frequency inverters manual. If still same problem change the ratio of gearbox. Go to ID 100
017	Oil is Leaking	Oil Leakage from Seal	If ambient Temp is over +40 Celsius or none stop work over 16 hours please change the top plug with a breather plug. Observe this manual for using breather plug. If this is not your case the seal could be damaged. Go to ID 100
018	Oil is Leaking	Oil Leakage from Plug	If you are using breather plug be sure it is in the correct place. This is the most top plug position according your mounting position. The plug may be not tight enough. There are some particles under the plug rubber surface. Clean and tighten the plug. If still same problem go to ID 100
019	Oil is Leaking	Oil Leakage from Housing	Observe exactly where the oil is coming out. It could be seal or plug point where it comes out and leaks over the housing. If this is your case go to ID 018/019. If you are sure oil comes out from housing than housing has some micro split / crack. Go to ID 100
020	Oil is Leaking	Oil Leakage from Cover	The sealing liquid under cover is split/defect. Disassemble the cover and put new sealing liquid. Assemble the cover and tighten the bolts. If still same problem go to ID 100
021	Gearbox is moving regularly on its mounting point	You are using Torque Arm	The movement of gear box is because of the run out of the shaft which you assemble the gearbox. This has no bad affect or harm to the gearbox and is normal unless you are using torque arm.
022	Gearbox is moving randomly on its mounting point	You are using Torque Arm	The movement of gear box is because of the run out and clearance of the shaft which you assemble the gearbox. Check the clearance of the assembling shaft and the clearances on your machine. This has no bad affect or harm to the gearbox unless you are using torque arm.
023	Motor is heating up	Motor is running over its nominal current	The motor power is not enough or some overload to the motor is possible. The motor may be defect. Go to ID 100
024	Motor is heating up	Ambient is dusty	Check the motor Fan Hub and rips. They must be free of dust. If you are using forced external fan, check if it is working. If you are using frequency inverter in low speeds and you do not have forced external fan, you may need forced external fan. Go to ID 100

ID	Problem	Observation	Remedy
025	Motor is running but Gearbox shaft does not turn	Scratching noise comes out	Some part (key, gear) may be defect inside gearbox. Go to ID 10
026	Gearbox Housing is Defect	You are using chain drive or pinion gear	The radial load or polygon effect of the chain may have caused the damage. Check also if the assembly bolts are loosened or the plate you assemble the gearbox is rigid enough. Check if you are using the correct diameter of chain drive and you are not exceeding max. allowed radial load. Check the position of your output element and re-calculate your radial load and check if this fit to the maximum allowed radial load. Go to ID 100
027	Output Shaft is Defect	You are using chain drive or pinion gear	The radial load or polygon effect of the chain may have caused the damage. Check also if the assembly bolts are loosened or the plate you assemble the gearbox is rigid enough. Check if you are using the correct diameter of chain drive and you are not exceeding max. allowed radial load. Check the position of your output element and re-calculate your radial load and check if this fit to the maximum allowed radial load. Go to ID 100
028	Gearbox is stopping too late	You are using braked motor	Please check the wiring diagram of the brake. There are two different kind of brake wiring diagram. The standard gearbox delivered from our factory is set to delayed braking. For sudden braking check the wiring diagram.
029	Gearbox is starting too late	You are using braked motor	A 24V shock transformer is recommended for fast opening of big brakes (≥ 200 Nm) and shock rectifier is recommended for smaller brakes (< 200 Nm). Go to ID 100.
100	Service Required	No self solution found	Please contact YILMAZ REDUKTOR Service point. See on the back side of this manual. Changing mechanical parts of gearbox can only be done by YILMAZ REDUKTOR or with information of YILMAZ REDUKTOR. Any change without informing YILMAZ REDUKTOR will cancel the warranty, manufacturer declaration and YILMAZ REDUKTOR will take no responsibility.

11- Disposal

If your product is no longer of use and you wish to dispose it, refer to the instructions here. If you have any questions regarding ecological disposal methods, please consult our service points given on the backside of this manual.

11.1- Disposal of Oil

Lubricants (oil and greases) are hazardous substances, which can contaminate soil and water. Collect drained lubricant into suitable receptacles and dispose of it according to the valid national guidelines.

11.2- Disposal of Sealing

Remove the sealing rings from the gear reducer, and clean them of oil and grease residues. Dispose of the sealing as composite material (metal/plastic)

11.3- Disposal of Metal

Divide up the remainder of the gear reducer into iron, aluminium, non-ferrous heavy metal if possible. Dispose of it according to the valid national guidelines.

Appendix

Warranty Conditions:

1. The geared motors and gear units are warranted for two year except the electric motor. For motor warranty please refer to the manual of the electric motor manufacturer or the warranty document of the motor manufacturer. This warranty is valid only if the gearbox is assembled and started up according our operating instructions and is used under the allowed conditions for the appropriate gearbox type in our catalogue. Special Gearbox parts made according customer request are not covered by this warranty.

2. The warranty time starts from the start up time written on the warranty document and last for two years. If the start-up time is more then three months after the billing time, the total warranty time is limited to 27 months starting from billing time. If the warranty document is not send to our company after start-up, the total warranty time will be limited to 24 months after the billing time.

3. Any time during the warranty for maintenance, repair or change will be added to the warranty time. This time starts from the date which the company or representative was made aware of the problem and ends on the date of the re-start-up.

4. If the product fails to operate because of a manufacturing or assembly failure during the warranty time, the product will be repaired free of charge.

5. If the product fails to operate because of a manufacturing or assembly failure during the warranty time and it is not possible to repair it, the product will be changed with a new one according to the report from our service department mentioning that the hazard can not be repaired.

6. Costumers must inform the manufacturer if there are some problems after the service and repair of the failed product.

7. The extra costs like stopped plant, physical or mental injuries etc. by the costumer side are not covered by this warranty except the product itself.

YILMAZ REDÜKTÖR San. ve Tic. A.S.
ATATÜRK Mah. Lozan Cad. No:17 P.K.:34522 Esenyurt-İstanbul-TÜRKİYE
Phone: +90 (0) 212 886 90 00 (8 Lines)

Warranty Decleration
and
Instruction Manual Receipt Form

YILMAZ REDUKTOR products are **warranted for 2 (Two) years** covering all parts and materials used in products and their production errors unless they are started-up and used according our service manual and is not modified or disassembled without an acknowledgement from our company.

The warranty covers all costs like repair, service, spare parts etc. and no charge will be asked under any name. The time for repair, service will be added to the warranty time.

For detailed warranty conditions please refer the back side of this page.

Serial No:
Type:

Manufacturer:
Company : YILMAZ REDUKTOR Sanayi ve Ticaret A.S.
Address : ATATÜRK Mah. Lozan Cad. No:17 P.K.34522 Esenyurt-İstanbul- TURKİYE
Telefon : +90 (0) 212 886 90 00 (8 Lines)

Stamp and Signature

Supplier / End User:

With signing this part and sending this back to our company your waranty period will be started and you are accepting that you have received the operating instruction of the product.

Name:
Billing Date/ Bill No.:
Start-Up Place / Date:
Address:
Phone:

Supplier/ End User Stamp and Signature

Domestic Service
Tel: +90 212 886 90 00
Int: 1223, 1228, 1287
Whatsapp: +90 554 713 71 02
E-Mail: servis@yr.com.tr

Spare Parts
Tel: +90 212 886 90 00
Int: 1224, 1277
Whatsapp: +90 506 774 44 35
E-Mail: yedekparca@yr.com.tr

International Services
If you call the above service point, you will be directed to our nearest service.

Yılmaz Redüktör Sanayi ve Ticaret A.Ş.
Atatürk Mah. Lozan Cad. No: 17, 34522 Esenyurt - İstanbul / Turkey
Tel: +90 212 886 90 00 | **E-Mail:** yilmaz@yr.com.tr